REV.	LOCAS.	DESCRIPTION	DATE	DRAWN
01		INITIAL RELEASE.	2010.07.10	张 荣

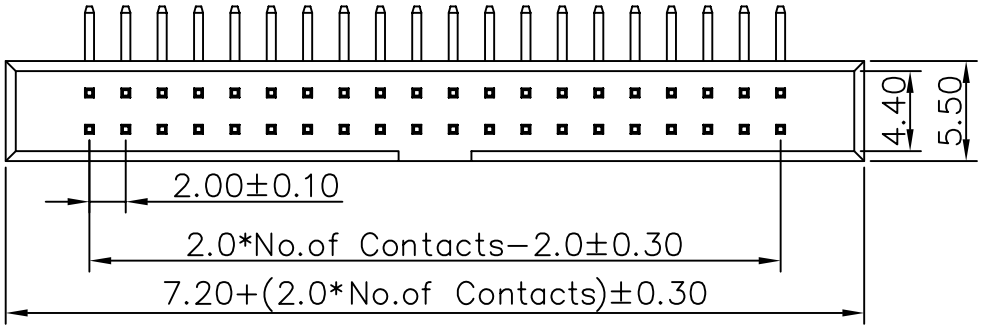

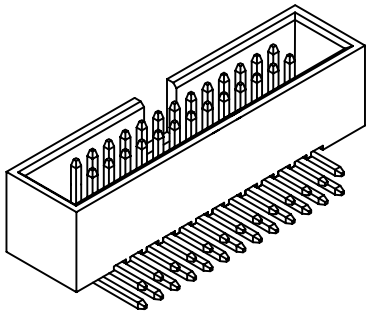

Specifications

Current Rating: 2Amp
Insulation Resistance: 1000MΩ Min.
Dielectric Withstanding: 500V AC
Contact Resistance: 20mΩ Max.
Operating Temperature:−40°C to +105°C

Materials

Contact Material: Brass
Insulation Material: Polyester, UL 94V−0
Nylon 66
All materials must be GP materials

Recommended P.C.Board
Hole Layout
(Tolerance:±0.05)

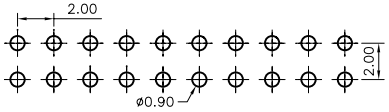

Ordering Information

MFR205 − XX XX A 01

No. of Pins per Row
02~40

Contact Plating
01=Tin
02=Gold Flash
Duplex plating
05=Gold Flash /Tin
...

深圳市硕康达科技有限公司
ShenZhenShi Sokconn Technology Co., Ltd

GENERAL TOLERANCE	
X.° ± 5.0°	X. ± 0.30
.X° ± 3.0°	.X ± 0.25
.XX° ± 2.0°	.XX ± 0.15
.XXX° ± 1.0°	.XXX ± 0.10

REV.	UNIT.	SCALE.	PAGE.
01	mm	5:1	1/1

DESIGN: 张 荣	DATE: 2010.07.10	DWG. NO. MFR205−A01	TITLE. 2.00 PIN BOX DUAL ROWS R/A TYPE BASE 5.60H
CHECKED:	DATE:		
AUDITED:	DATE:	PART NO. MFR205−XX XX A01	
APPROVED:	DATE:		