REV.	LOCAS.	DESCRIPTION	DATE	DRAWN
01		INITIAL RELEASE.	2012.12.11	尹 晖

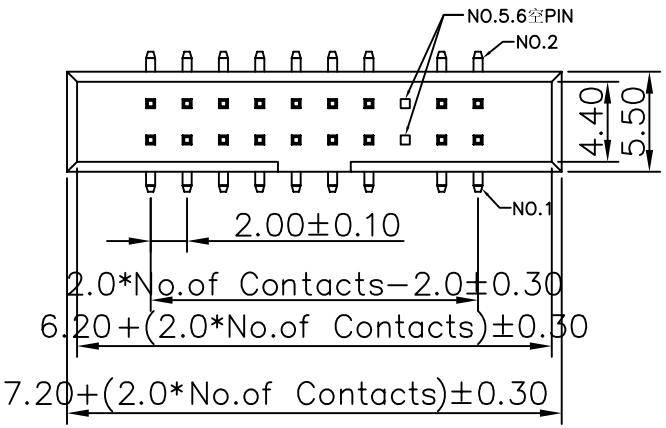

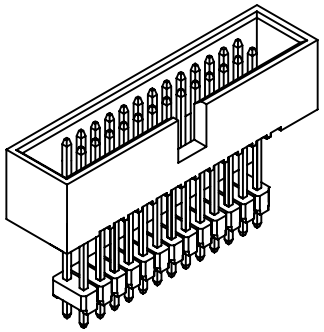

Specifications

Current Rating: 2Amp
Insulation Resistance: 1000MΩ Min.
Dielectric Withstanding: 500V AC
Contact Resistance: 20mΩ Max.
Operating Temperature:−40°C to +105°C

Materials

Contact Material: Brass
Insulation Material: Polyester, UL 94V−0
Nylon 9T
All materials must be GP materials

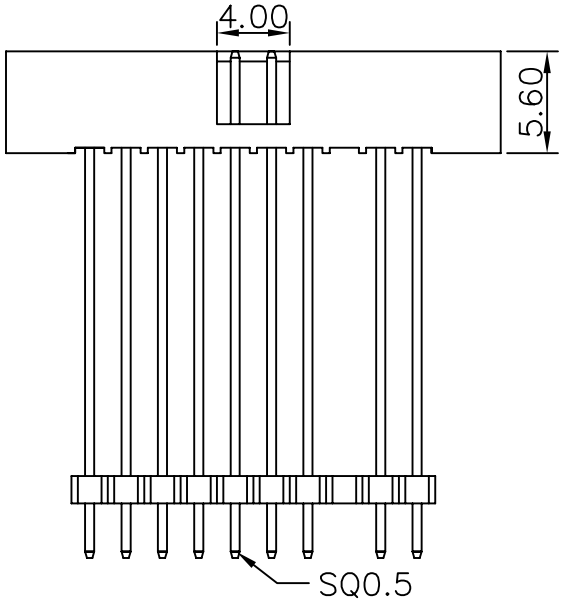

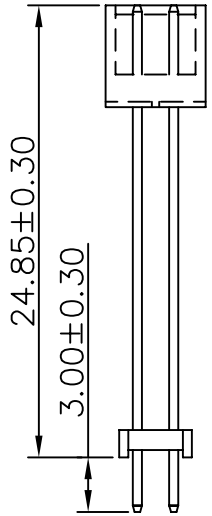

Recommended P.C.Board
Hole Layout

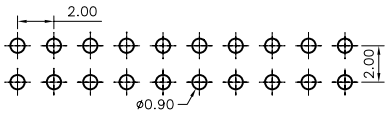

Ordering Information

MFDB22 − XX XX A 01

No. of Pins per Row
02~40

Contact Plating
01=Tin
02=Gold Flash
Duplex plating
05=Gold Flash /Tin
...

深圳市硕康达科技有限公司 ShenZhenShi Sokconn Technology Co., Ltd	GENERAL TOLERANCE		DESIGN: 尹 晖	DATE: 2012.12.11	DWG. NO. MFDB22−A01	TITLE. 2.00 PIN BOX DUAL ROWS DIP TYPE BASE 24.85H	
	X.° ± 5.0°	X. ± 0.30	CHECKED:	DATE:			
	.X° ± 3.0°	.X ± 0.25	AUDITED:	DATE:	PART NO. MFDB22−22 XX A01		
	.XX° ± 2.0°	.XX ± 0.15	APPROVED:	DATE:			
	.XXX° ± 1.0°	.XXX ± 0.10					
REV. 01	UNIT. mm	SCALE. 1:1	PAGE. 1/1				