REV.	LOCAS.	DESCRIPTION	DATE	DRAWN
01		INITIAL RELEASE.	2013.06.20	李春桥

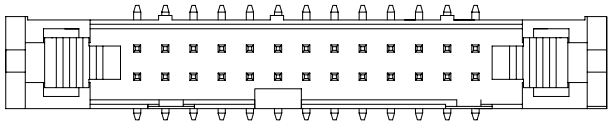

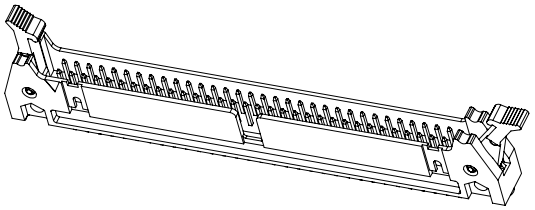

MATERIAL

Insulator :PBT/Nylon 6T(UL94V-0)
Contact :Brass
Contact Plated:Gold or Tin over 50U″ Nickel
Color :Black

SPECIFICATION

Current Rate :1AMP
Operation Temperature:-40° C to +105° C
Contact Resistance :20mΩMax at DC 1A
Insulation Resistance :1000MΩMin at DC 500V
Dielectric Strength :AC 500V Per Minute

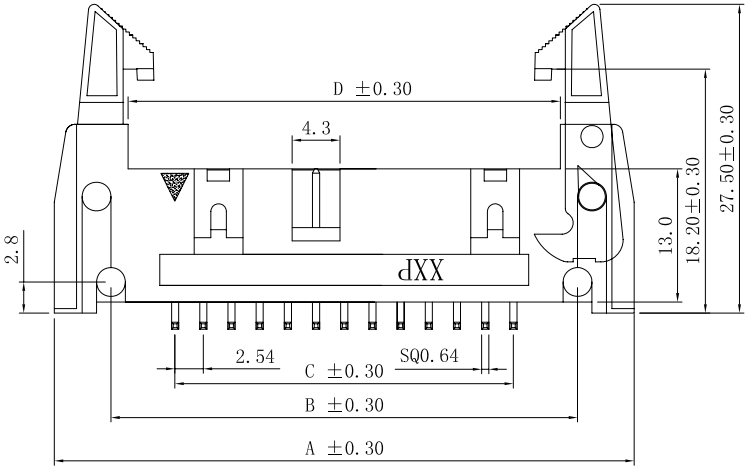

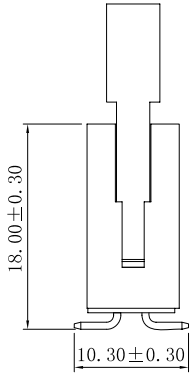

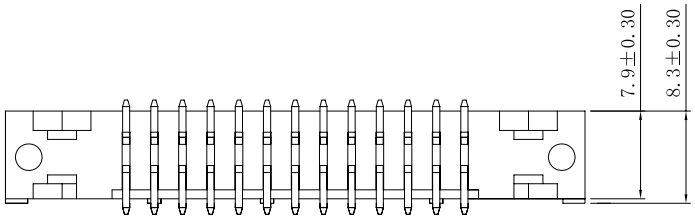

DIMENSION TABLE

PIN	A±0.2	B±0.3	C±0.20	D±0.20
10	31.90	21.68	10.16	18.32
14	36.98	26.76	15.24	23.40
16	39.52	29.30	17.78	26.23
20	44.60	34.38	22.85	31.32
26	52.22	42.00	30.46	38.94
30	57.30	47.08	35.56	44.02
34	62.38	52.16	40.64	49.10
40	70.00	59.78	48.26	56.72
50	82.70	72.48	60.96	69.42
60	95.40	85.18	73.66	82.12
64	100.48	90.26	78.74	87.20

Ordering Information

GHS201 – XX XX A 01

No. of Pins per Row
01~40

Contact Plating
01=Tin
02=Gold Flash
Duplex plating
05=Gold Flash /Tin
…

深圳市硕康达科技有限公司
ShenZhenShi Sokconn Technology Co.,Ltd

GENERAL TOLERANCE	
X.° ± 5.0°	X. ± 0.30
.X° ± 3.0°	.X ± 0.25
.XX° ± 2.0°	.XX ± 0.15
.XXX° ± 1.0°	.XXX ± 0.10

DESIGN: 李春桥	DATE: 2013.06.20
CHECKED:	DATE:
AUDITED:	DATE:
APPROVED:	DATE:

DWG. NO. GHS201-A01

PART NO. GHS201-XX XX A01

TITLE. 2.54 PIN HEADER SINGLE ROW SMT TYPE

REV.	UNIT.	SCALE.	PAGE.
01	mm	1:1	1/1