REV.	LOCAS.	DESCRIPTION	DATE	DRAWN
01		INITIAL RELEASE.	2007.10.10	尹 晖

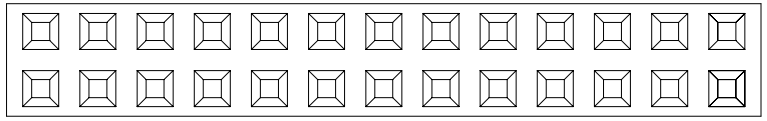

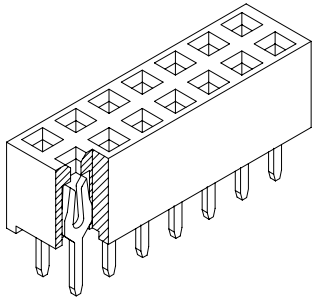

Specifications

Current Rating: 3Amp
Insulation Resistance: 1000MΩ Min.
Dielectric Withstanding: 600V AC/DC
Contact Resistance: 20mΩ Max.
Operating Temperature:−40°C to +105°C

Materials

Contact Material: Brass Gold Flash /Tin
Insulation Material: Polyester, UL 94V−0
PBT
All materials must be GP materials

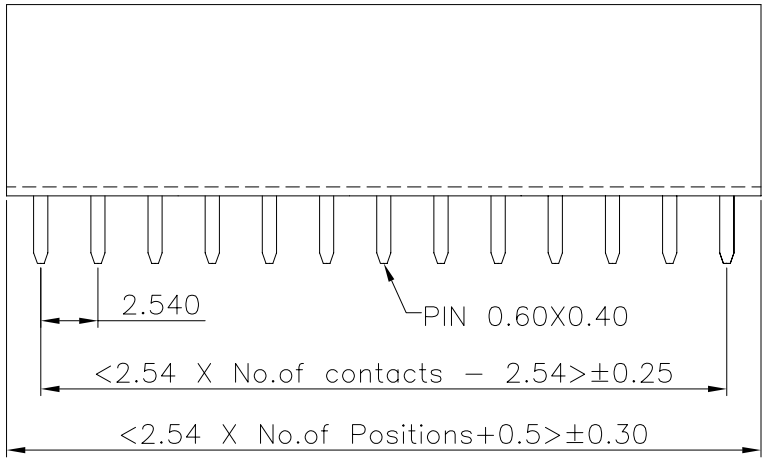

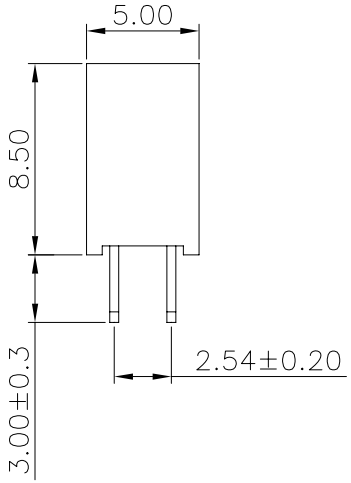

Recommended P.C.Board
Hole Layout

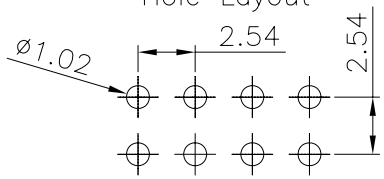

Ordering Information

FHD201 - XX XX A 01

No. of Pins per Row
02~40

Contact Plating
01=Tin
02=Gold Flash
Duplex plating
05=Gold Flash /Tin
15=Gold 10u"/Tin
...

深圳市硕康达科技有限公司
ShenZhenShi Sokconn Technology Co.,Ltd

GENERAL TOLERANCE	
X.° ± 5.0°	X. ± 0.30
.X° ± 3.0°	.X ± 0.25
.XX° ± 2.0°	.XX ± 0.15
.XXX° ± 1.0°	.XXX ± 0.10

DESIGN: 尹 晖	DATE: 2007.10.10	DWG. NO. FHD201−A01	TITLE. 2.54 FEMALE HEADER DUAL ROWS DIP TYPE BASE 8.50H
CHECKED:	DATE:	PART NO. FHD201−XX XX A01−X	
AUDITED:	DATE:		
APPROVED:	DATE:		

REV.	UNIT.	SCALE.	PAGE.
01	mm	5:1	1/1