REV.	LOCAS.	DESCRIPTION	DATE	DRAWN
01		INITIAL RELEASE.	2007.10.10	宋 辉

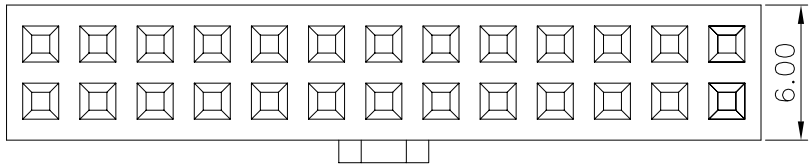

Recommended P.C.Board

Hole Layout

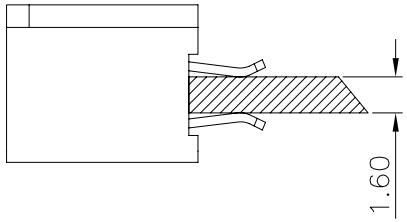

Specifications

Current Rating: 3Amp
Insulation Resistance: 1000MΩ Min.
Dielectric Withstanding: 600V AC/DC
Contact Resistance: 20mΩ Max.
Operating Temperature:−40°C to +105°C

Materials

Contact Material: Brass
Insulation Material: Polyester, UL 94V−0
PBT
All materials must be GP materials

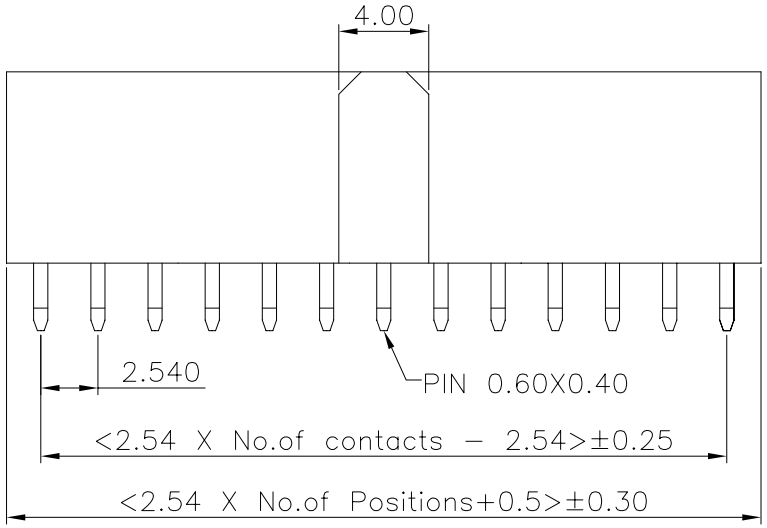

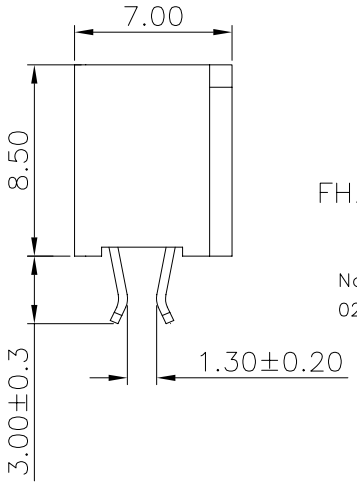

Ordering Information

FHA201 − XX XX A 01 − X

- XX: No. of Pins per Row, 02~40
- XX: Contact Plating
  - 01=Tin
  - 02=Gold Flash
  - Duplex plating
    - 05=Gold Flash /Tin
    - ...
- X: Options
  - P=cap
  - T=tape reel
  - C=acetate tape
  - PT=cap+tape reel

深圳市硕康达科技有限公司
ShenZhenShi Sokconn Technology Co.,Ltd

GENERAL TOLERANCE	
X.° ± 5.0°	X. ± 0.30
.X° ± 3.0°	.X ± 0.25
.XX° ± 2.0°	.XX ± 0.15
.XXX° ± 1.0°	.XXX ± 0.10

DESIGN: 宋 辉	DATE: 2007.10.10
CHECKED:	DATE:
AUDITED:	DATE:
APPROVED:	DATE:

DWG. NO. FHA201−A01

PART NO. FHA201−XX XX A01−X

TITLE. 2.54 FEMALE HEADER DUAL ROWS DIP TYPE BASE 8.50H

REV.	UNIT.	SCALE.	PAGE.
01	mm	5:1	1/1