REV.	LOCAS.	DESCRIPTION	DATE	DRAWN
01		INITIAL RELEASE.	2012.05.17	尹 晖

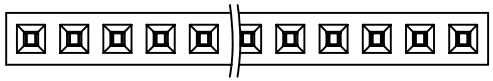

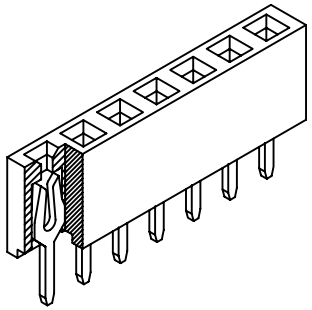

Specifications

Current Rating: 2Amp
Insulation Resistance: 1000MΩ Min.
Dielectric Withstanding: 500V AC
Contact Resistance: 20mΩ Max.
Operating Temperature:−65°C to +105°C

Materials

Contact Material: Phosphor Bronze
Insulator Material: Nylon 6T UL94V−0,

All materials must be GP materials

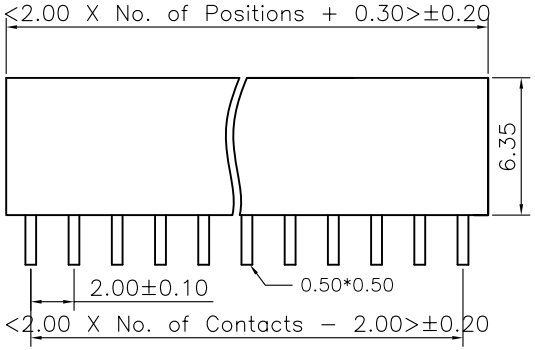

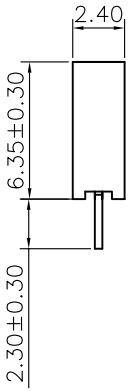

Recommended P.C.B. Layout

Tolerance:±0.05mm

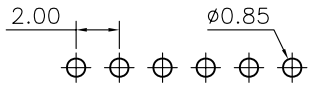

Ordering Information

FFD150 − XX XX A 04

No. of Pins per Row
02~40

Contact Plating
01=Tin
02=Gold Flash
Duplex plating
05=Gold Flash /Tin
...

深圳市硕康达科技有限公司 ShenZhenShi Sokconn Technology Co.,Ltd	GENERAL TOLERANCE		DESIGN: 尹 晖	DATE: 2012.05.17	DWG. NO. FFD150−A04	TITLE. 2.00 FEMALE HEADER SINGLE ROWS DIP TYPE
	X.° ± 5.0°	X. ± 0.30	CHECKED:	DATE:		
	.X° ± 3.0°	.X ± 0.25	AUDITED:	DATE:	PART NO. FFD150−XX XX A04	
	.XX° ± 2.0°	.XX ± 0.15	APPROVED:	DATE:		
	.XXX° ± 1.0°	.XXX ± 0.10				
REV. 01 / UNIT. mm / SCALE. 1:1 / PAGE. 1/1						