REV.	LOCAS.	DESCRIPTION	DATE	DRAWN
01		INITIAL RELEASE.	2013.06.20	李春桥

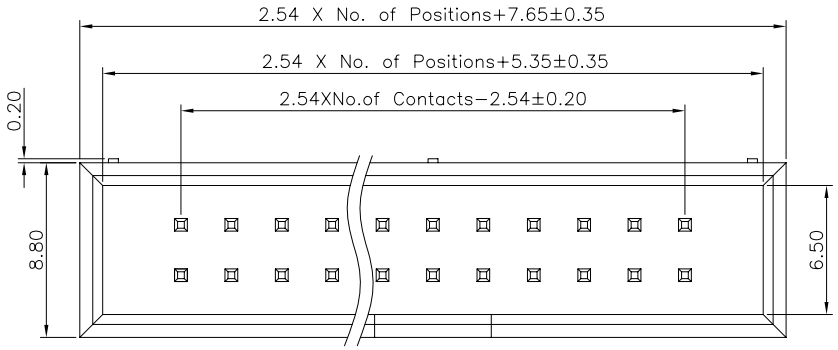

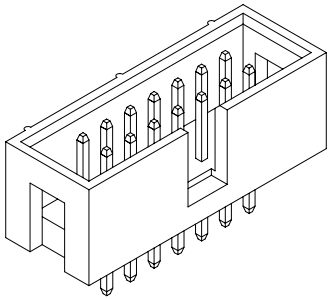

Specifications

Current Rating: 3Amp
Insulation Resistance: 1000MΩ Min.
Dielectric Withstanding: 500V AC
Contact Resistance: 20mΩ Max.
Operating Temperature:−40°C to +105°C

Materials

Contact Material: Brass
Insulation Material: Polyester, UL 94V−0
PBT/Nylon 6T
All materials must be ROHS materials

Recommended P.C.Board
Hole Layout

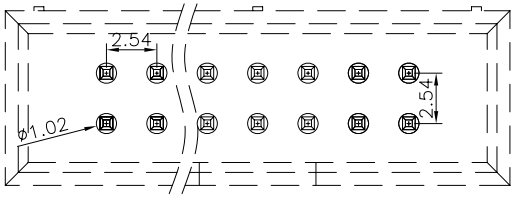

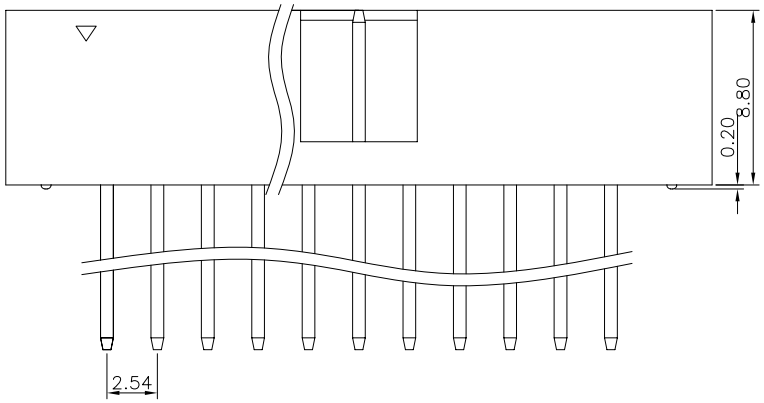

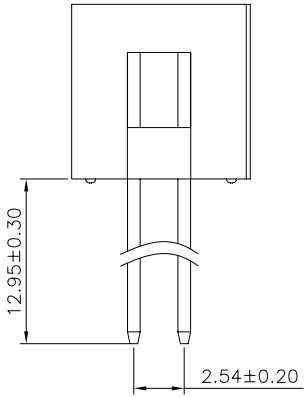

Ordering Information

BHD201 − XX XX A 04

No. of Pins per Row
02~40

Contact Plating
01=Tin
02=Gold Flash
Duplex plating
05=Gold Flash /Tin
…

深圳市硕康达科技有限公司 ShenZhenShi Sokconn Technology Co.,Ltd	GENERAL TOLERANCE		DESIGN: 李春桥	DATE: 2013.06.20	DWG. NO. BHD201−A04	TITLE. 2.54 PIN BOX DUAL ROWS DIP TYPE BASE 9.1H	
	X.° ± 5.0°	X. ± 0.30	CHECKED:	DATE:			
	.X° ± 3.0°	.X ± 0.25	AUDITED:	DATE:	PART NO. BHD201−XX XX A04		
	.XX° ± 2.0°	.XX ± 0.15	APPROVED:	DATE:			
	.XXX° ± 1.0°	.XXX ± 0.10					
REV. 01 / UNIT. mm / SCALE. 1:1 / PAGE. 1/1							